COUNTY OF	ITEM NO.	SHEET NO.

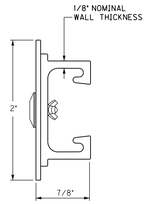

SIGN BRACE

SQUARE POST CLAMP:
11 GA. TYPE 304. #2B FINISHED STAINLESS STEEL WITH STAINLESS STEEL CARRIAGE BOLT.

CLAMPS CAN BE TWIST LOCKED INTO PLACE WITHOUT SLIDING THE CLAMPS FROM AN OPEN END OF THE CHANNEL BRACE.

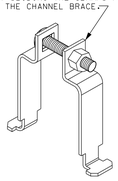

SQUARE POST CLAMP

NOTE:

1. MAXIMUN AREA PER CONNECTING JUNCTION = 16 SQ. FT.
2. BRACING SHOULD NOT BE SPLICED WITHIN 6' OF A BRACE TO POST JUNCTION.

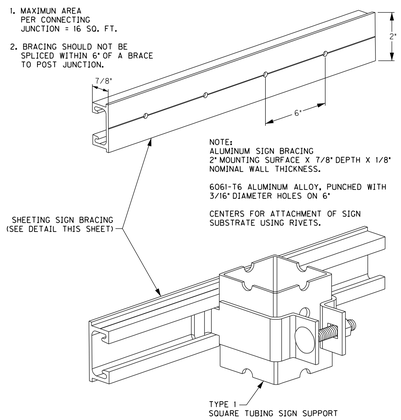

SQUARE POST CLAMP & BRACE

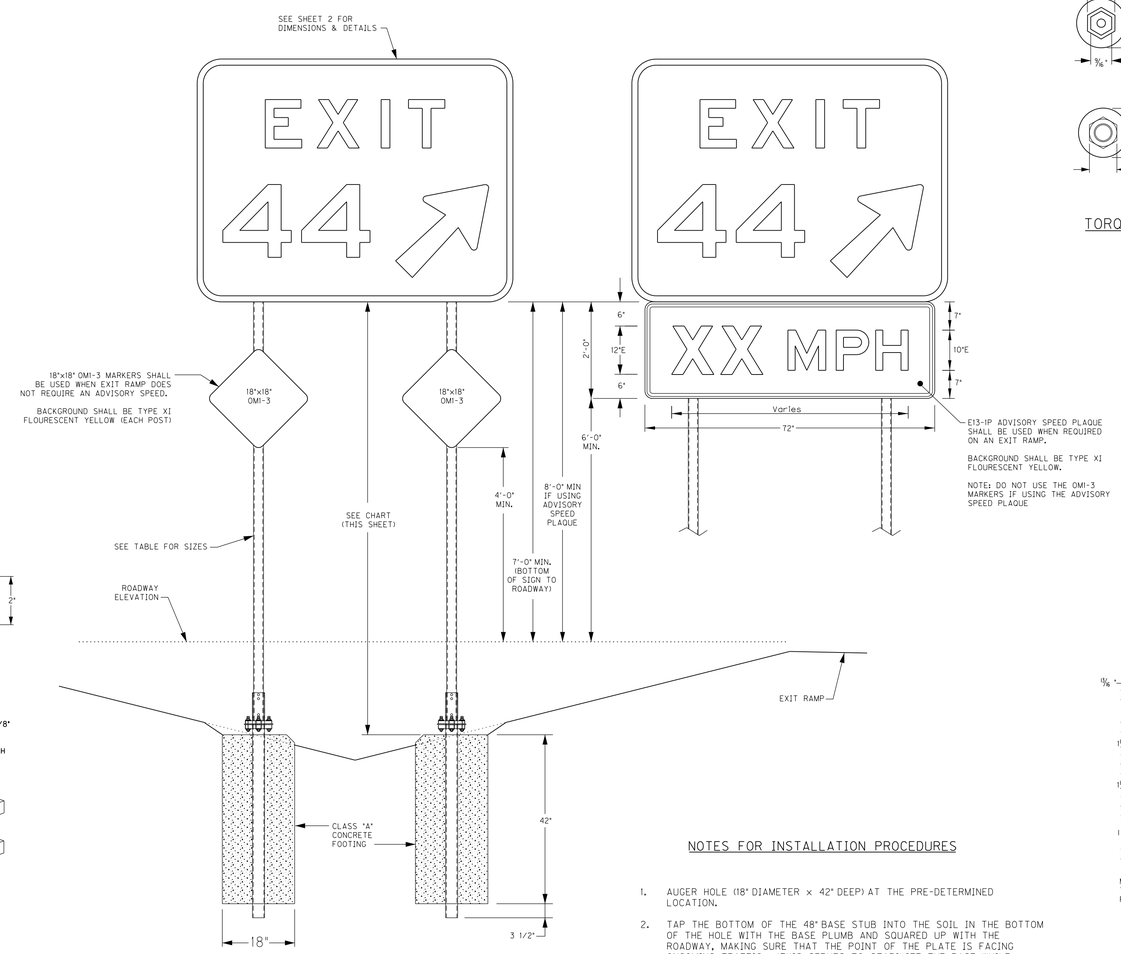

STANDARD EXIT GORE SIGN INSTALLATION

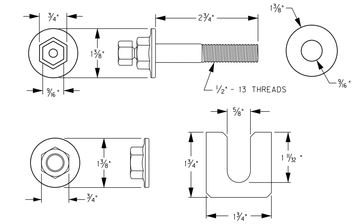

TORQUE FREE MATCH PLATE HARDWARE

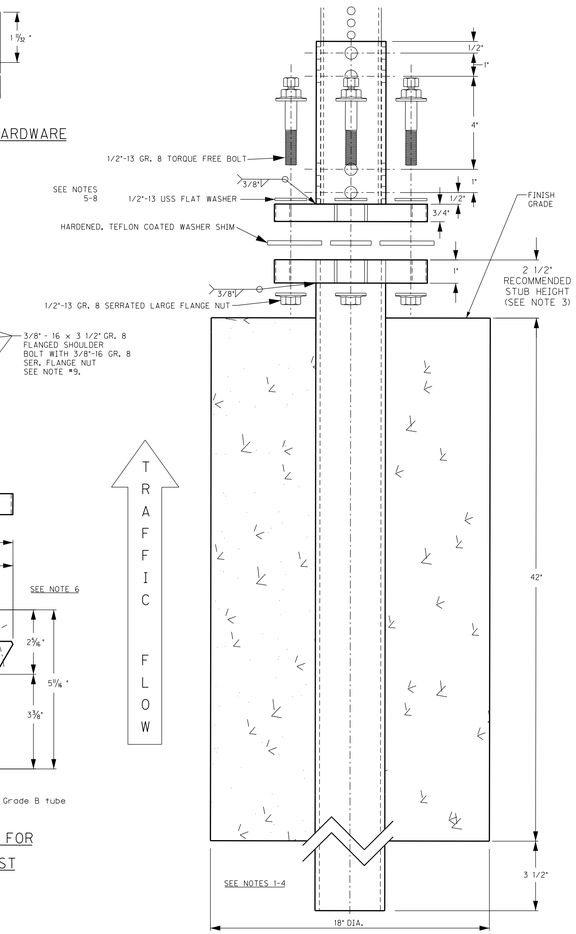

TYPE "D" SUPPORT
OMNI-DIRECTIONAL BREAK-A-WAY FOR TYPE 1 POSTS

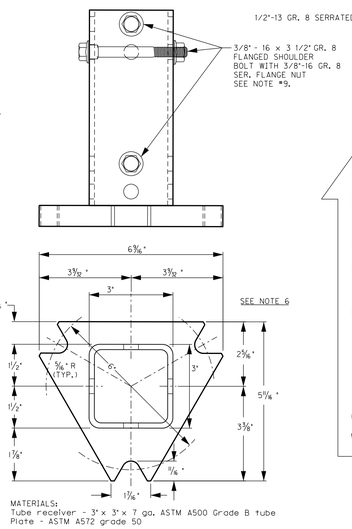

TOP POST RECEIVER / FOR
2 - 1/2 " SQUARE POST

• 2 1/4" x 12 GA. MAY BE INSERTED INTO 2 1/2" x 12 GA. FOR ADDITIONAL WINDLOAD.

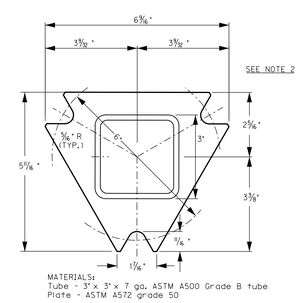

BOTTOM BASE CONCRETE STUB

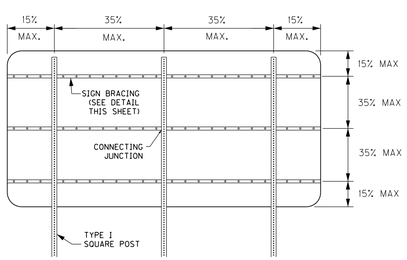

3 POST - BRACING DIAGRAM

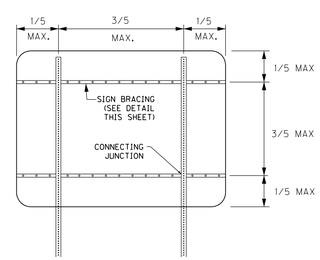

2 POST - BRACING DIAGRAM

NOTES FOR INSTALLATION PROCEDURES

1. AUGER HOLE (18" DIAMETER x 42" DEEP) AT THE PRE-DETERMINED LOCATION.
2. TAP THE BOTTOM OF THE 48" BASE STUB INTO THE SOIL IN THE BOTTOM OF THE HOLE WITH THE BASE PLUMB AND SQUARED UP WITH THE ROADWAY, MAKING SURE THAT THE POINT OF THE PLATE IS FACING ONCOMING TRAFFIC. (THIS SERVES TO STABILIZE THE BASE WHILE POURING THE CONCRETE AS WELL AS TO ALLOW FOR WATER DRAINAGE BELOW THE CONCRETE FOOTING.)
3. DEPTH OF INBEDMENT TO LEAVE 2-1/2" FROM THE GRADE TO THE TOP OF THE BASE.
4. ALLOW CONCRETE TO CURE AT LEAST 5 DAYS BEFORE ERECTING SIGN.
5. PLACE 1 EACH TEFLON COATED WASHER SHIM ON EACH OF THE 3 NOTCHED POINTS, WITH THE OPEN SIDE FACING TOWARDS THE CENTER OF THE TRIANGLE.
6. PLACE TOP POST RECEIVER ON TO THE BASE AND WASHER SHIMS SO THAT THE SIGN POST IS IN THE CORRECT POSITION FOR SIGN VISIBILITY.
7. PLACE 1 EACH 1/2" WASHER ONTO TORQUE FREE BOLT AND PLACE IN EACH NOTCHED POINT OF THE TRIANGLE. PUSH EACH TEFLON COATED WASHER SHIM AGAINST THE SHANK OF EACH BOLT AND FINGER TIGHTEN 1/2" FLANGED LOCK NUT.
8. FULLY TIGHTEN, THEN LOOSEN, ALL THREE TORQUE FREE BOLTS USING THE LARGER 3/4" HEX HEAD. COMPLETE BY TIGHTENING EACH BOLT USING THE SMALLER 9/16" HEX HEAD UNTIL IT TWISTS OFF.

   •NOTE: SECONDARY HEAD WILL TWIST OFF AT DESIRED TORQUE LEVEL.
9. INSERT SIGN SUPPORT INTO THE TUBULAR PORTION OF TOP POST RECEIVER AND SECURE WITH 3 EACH 3/8"-16 x 3-1/2" GRADE 8 FLANGED SHOULDER BOLTS AND FLANGED NUTS.

   •NOTE: WHERE HIGHER WINDLOAD IS DESIRED, INSERT THE NEXT SIZE SMALLER SQUARE POST INSIDE BOTTOM OF MAIN UPRIGHT POST.

   •NOTE: ON MULTI-LEG INSTALLATIONS, BE SURE THAT ALL ANCHORS ARE SQUARED AND LINED UP WITH EACH OTHER.
10. TYPE D BREAKAWAY SIGN SUPPORT SYSTEMS FOR TYPE 1 POSTS SHALL BE SELECTED FROM THE KENTUCKY DEPARTMENT OF HIGHWAYS' LIST OF APPROVED MATERIALS, OR AN APPROVED EQUAL. ACCEPTABLE ALTERNATES SHALL BE APPROVED BY THE DIVISION OF TRAFFIC OPERATIONS AND FHWA PRIOR TO INSTALLATION.

EXIT GORE SIGNS

	SIGN SIZE	NUMBER OF SUPPORTS	POST GAUGE	POST LENGTH FROM GROUND TO BOTTOM OF SIGN
2 DIGITS	5' x 6'	2 POSTS	12	12'
3 DIGITS	5' x 7.5'	2 POSTS	12	8' MAX
		3 POSTS	12	14' MAX
4 DIGITS	5' x 9'	3 POSTS	12	10 1/2 ' MAX

NOT TO SCALE

EXIT GORE DETAIL SHEET 1 of 2

USER: ted.swansegar
DATE PLOTTED: September 7, 2018
E-SHEET NAME:
MicroStation v8.11.9.832